PolyGard® AT-1195 V3

Electrochemical Oxygen Transmitter
Serial No. AT03-003

User's Manual

January 20, 2009

February 11, 2020 – *Revision*

1 General Overview 3

2 Functional Description 3

2.1 Control Mode 3
2.2 Sensor 3

3 Installation 4

3.1 Mounting Instructions 4
3.2 Installation 4

4 Electrical Connection 4

4.1 Wiring Connection 5

5 Commissioning 5

5.1 Calibration 5
5.2 Manual Zero Point 6
5.3 Gain 6
Calculation of Control Voltage 6
5.4 Option Relay Output 7

6 Inspection and Service 7

6.1 Inspections 7
6.2 Calibration 7
6.3 Exchange of Sensor Element 7

7 Troubleshooting 8

7.1 Analog Mode 8

8 Cross-sensitivity Data 8

9 Technical Data 9

10 Figures 11

11 Notes and General Information 13

11.1 Intended Product Application 13
11.2 Installers' Responsibilities 13
11.3 Maintenance 13
11.4 Limited Warranty 13

Electrochemical Oxygen Transmitter

1 General Overview

The PolyGard® O_2 gas transmitter AT-1195 with digital processing of the measuring values and temperature compensation is used for the continuous monitoring of the ambient air to detect the presence of oxygen concentrations. Main application ranges are laboratories, food production etc. where changes of the oxygen concentrations might be possible.

The AT-1195 V3 transmitter is equipped with an analog output where the signal can be selected as current signal 4-20 mA or as voltage signal 2-10 V. In the 4-20 mA mode the transmitter also works in the 2-wire technique.

The intended sites are all areas being directly connected to the public low voltage supply, e.g. residential, commercial and industrial ranges as well as small enterprises.

The PolyGard® O_2 analog transmitter must not be used in potentially explosive atmospheres.

2 Functional Description

2.1 Control Mode

Analog mode:

The analog output can be selected as current signal with 4-20 mA or as voltage signal 2-10 V. In the 4-20 mA mode and without any supplementary options, the AT-1195 V3 also works in the 2-wire technique.

2.2 Sensor

The chemical process of the measurement is based on the principle of a galvanic micro-fuel cell. The gas or the ambient air to be monitored diffuses through a membrane filter into the measuring cell towards the cathode. Cathode and anode are electrically contacted, therefore due to the oxidation there is an electric current proportional to the oxygen partial pressure. This current signal is linear to the oxygen concentration. The current is evaluated by the connected amplifier and transformed into a linear output signal.

The diffusion through the membrane and the thin electrolytic coat are complex, temperature dependant, electrochemical processes influencing the ion current of the sensor. Therefore the sensor is temperature-compensated within the specified temperature range.

The electrolyte, the catholyte and the composition of the anode are in a way that the oxygen diffusing towards the cathode is electrochemically reduced.

The electrolyte is used up by the electrochemical process. So the sensor life time is limited to two years. Calibration during sensor life time is not necessary.

Caution: There is a small quantity of corrosive liquid in the sensor element. If in case of damage persons or objects touch the liquid, you have to clean the affected areas as fast and carefully as possible with tap water. Out of use sensors must be disposed in the same way as batteries.

3 Installation

Note:
Avoid any force (e.g. by thumb) on the sensor element during operation or installation. Electronics can be destroyed by static electricity. Therefore, do not touch the equipment without a wrist strap connected to ground or without standing on a conductive floor.

3.1 Mounting Instructions

When choosing the mounting site please pay attention to the following:

- The specific weight of oxygen O_2 is higher than that of air (factor 1,10).
  Recommended mounting height is 1.5 m (5 feet) to 1.8 m (6 feet) above floor.
- Choose mounting location of the sensor according to the local regulations.
- Consider the ventilation conditions! Do not mount the transmitter in the centre of the airflow (air passages, suction holes).
- Mount the transmitter at a location with minimum vibration and minimum variation in temperature (avoid direct sunlight).
- Avoid locations where water, oil etc. may influence proper operation and where mechanical damage might be possible.
- Provide adequate space around the sensor for maintenance and calibration work.

Duct mounting

- Mount only in a straight section of duct with minimum air vortex. Keep a minimum distance of 1 m (3,5 feet) from any curve or obstacle.
- Mount only in a duct system with a maximum air velocity of 10 m/s (2000 ft/min) or less.
- Mounting must be performed so that the probe openings are in line with the airflow.

3.2 Installation

- Open the cover. Unplug basic PCB carefully from the bottom part.
- Fix bottom part by screws vertically to the wall (terminal blocks to the ground).
- Replug the basic PCB at X4 and X5 with care. Replace the cover.

4 Electrical Connection

Consider static electricity! See 3. Mounting

- Installation of the electrical wiring should only be executed by a trained specialist according to the connection diagram, without any power applied to conductors and according to the corresponding regulations!
- Avoid any influence of external interference by using shielded cables for the signal line, but do not connect the shield.
- Recommended cable for analog mode: Belden Twisted Shielded (20 AWG), max. resistance 73 Ω/km (20.8 Ω/1000 ft).
- It is important to ensure that the wire shields or any bare wires do not short the mounted PCB.

4.1 Wiring Connection

- Open the cover. Unplug basic PCB carefully from terminal blocks X4 and X5.
- Insert the cable and connect cable leads to terminal blocks. See fig. 1 and 2.
- Replug the PCB in the terminal blocks X4, X5. Replace the cover.

5 Commissioning

Consider commissioning instructions at any exchange of the sensor elements.

Only trained technicians should perform the following:

- Check mounting location.
- Select output signal form: Current or voltage, and starting point 0 or 20%. See fig. 4.
- Check power voltage.
- Check PCB AT03 for correct mounting at X4 and X5.
- Check the sensor for proper mounting at the connectors X3 of the PCB AT-1195 V3.
- Calibrate the transmitter (if not already factory-calibrated).

Required instruments for commissioning (calibration) of the transmitter:

- Test gas bottle with test gas O_2 in the range of 20.8% vol O_2 in Nitrogen or Air Balance.
- Gas pressure regulator with flow meter to control the gas flow to 150 ml/min.
- Calibration adapter with tube. Calibration set CONKIT-E/CH-LC. See fig. 5.
- Digital voltmeter with range 0 – 300 mV, accuracy 1%.
- Small screwdriver.

Note:

Prior to calibration the sensor must be connected to the power supply and fully stabilised for at least 1 hour without interruption.

Please observe proper handling procedures for test gas bottles!

5.1 Calibration

Depending on the version and the control mode there are two different possibilities to calibrate the transmitter:

Manual calibration

Manual calibration is only possible if the transmitter is equipped with the push-button “Zero” and the potentiometer “Gain” (= version for manual calibration).

5.2 Manual Zero Point

- The zero-point is factory-set; therefore zero calibration is not necessary.

5.3 Gain

- Connect calibration adapter carefully to the sensor element.
- Apply calibration test gas O_2 (150 ml/min; 1 Bar (14.5 psi) ± 10%).
- Wait two minutes until the signal is stable, adjust control voltage with potentiometer ”Gain” until the signal corresponds to the calculated value ± 2 mV, see “Calculation of Control Voltage”.
- Remove calibration adapter with a careful light turn. Check the sensor for correct mounting!

  By limiting the gain factor, calibration will not be possible any more when the sensitivity of the sensor reaches a residual sensitivity of 30 %. Then the sensor has to be replaced.

Calculation of Control Voltage

Signal start 2 V / 4 mA

$$\text{Control voltage (mV)} = \frac{160\ (\text{mV}) \times \text{test gas concentration } O_2\ (\text{vol. \%})}{\text{measuring range } O_2\ (\text{vol. \%})} + 40\ (\text{mV})$$

Signal start 0 V / 0 mA

$$\text{Control voltage (mV)} = \frac{200\ (\text{mV}) \times \text{test gas concentration } O_2\ (\text{vol. \%})}{\text{measuring range } O_2\ (\text{vol. \%})}$$

Example:

Measuring range	25 vol. %
Test gas concentration	20.8 vol. % O_2
Control voltage: Signal start 2 V / 4 mA	173.1 mV
Control voltage: Signal start 0 V / 0 mA	166.4 mV

Signal start 2 V / 4 mA

$$\frac{160\ (\text{mV}) \times 20.8\ (\text{vol. \%})}{25\ (\text{vol. \%})} + 40\ (\text{mV}) = 173.1\ \text{mV}$$

Signal start 0 V / 0 mA

$$\frac{200\ (\text{mV}) \times 20.8\ (\text{vol. \%})}{25\ (\text{vol. \%})} = 166.4\ \text{mV}$$

5.4 Option Relay Output

The two relays are activated in dependence of the gas concentration. If the gas concentration exceeds the adjusted alarm threshold, the corresponding relay switches on. If the gas concentration falls below the threshold minus hysteresis, the relay switches off again.

The contact function for relay 2, NC (normally closed) or NO (normally open), can be selected via the jumper NO/NC. See fig 1 and 3. Relay 1 is equipped with a change-over contact.

Via the ModBus interface the two alarm thresholds and the hysteresis are freely adjustable at the PC within the measuring range. The procedure can be read from the user manual “ModBus Software”.

The following parameters are factory-set.

Alarm threshold 1 = Relay 1: 19 (vol. %)
Alarm threshold 2 = Relay 2: 17 (vol. %)
Switching hysteresis: 1 (vol. %)

6 Inspection and Service

6.1 Inspections

Inspection, service and calibration of the transmitters should be done by trained technicians and executed at regular intervals. We therefore recommend concluding a service contract with IN*TEC* Controls or one of their authorized partners.

6.2 Calibration

(See section 5.1 and 5.2)

- At commissioning and at periodic intervals determined by the person responsible for the gas detection system (recommendation every 12 months).
- After exchange of the sensor
- If in case of operational or climatic influences the sensitivity of the sensor falls below 30 % in operation, calibration will not be possible any more. In this case the sensor has to be changed.

6.3 Exchange of Sensor Element

Consider static electricity! See point 3.

Sensor should always be installed without power applied:

- Unplug basic PCB AT1195 carefully from the bottom part.
- Unplug old sensor element from the PCB.
- Take the new sensor out of the original packing.
- Plug the sensor element in the PCB at X7.
- Replug the PCB AT1195 in the terminal blocks X4, X5 carefully.
- Calibrate according to section 5.

7 Troubleshooting

7.1 Analog Mode

Trouble	Cause	Solution
Output signal < 3 mA / 1,5 V and/or control voltage < 30 mV only for starting signal 2V/4 mA	Jumper 0-20 % not set	Check jumper position
	Power voltage not applied	Measure tension at X4: Two-wire: Pin 1 (+) and 4 (-) Three-wire: Pin 1 (+) and 2 (-)
	PCB AT03 not plugged in correctly at X4 and X5	Replug PCB correctly
	Wire break	Check the wiring
Output signal > 22 mA /220 mV	Short-circuit	Check the wiring
Control voltage does not reach the calculated value	Sensor element not calibrated	Calibrate sensor element
	Sensor sensitivity < 30 %	Replace sensor element
No reaction of the output signal in spite of gas concentration	Power voltage not applied	Measure tension at X4
	Signal (Pin 4) not wired correctly	Check the wiring

8 Cross-sensitivity Data

The cross sensitivity can be read from the table Technical Data. The table doesn't claim to be complete. Other gases can have an influence on the sensitivity, too. The indicated sensitivity data are only standard values referring to new sensor elements.

9 Technical Data

General sensor performances		
Gas type	Oxygen (O_2)	
Sensor element	Electrochemical, diffusion	
Measuring range	0 – 25 vol. %	
Temperature range	-4°F to 122°F (-20°C to 50°C)	
Pressure range	Atmosphere ± 15 %	
Humidity	0 – 99 % RH non condensing	
Storage temperature range	23°F to 86°F (-5°C to 30°C)	
Storage time	Max. 6 months	
Mounting height	1.5 to 1.8 m (5 to 6 ft.)	
Accuracy	± 0.1 vol. %	
Long-term output drift	< 5% signal loss/year	
Response time	t_{90} < 15 sec.	
Life expectancy	2 years/normal operating environment	
Cross sensitivity[1]	Concentration (ppm)	Reaction (vol. %O_2)
Carbon dioxide, CO_2	5 vol. %	2
Electrical		
Power supply	18 - 28 VDC/AC, reverse polarity protected (2-wire mode only VDC)	
Power consumption (without options) - Analog mode - Bus mode	 22 mA, max. (0.6 VA) 12 mA, max. (0.3 VA)	
Output signal		
Analog output signal Selectable: Current / tension Starting point 0 / 20 %	(0) 4 – 20 mA, load ≤ 500 Ω, (0) 2 - 10 V; load ≥ 50 k Ω proportional, overload and short-circuit proof	
Physical		
Enclosure[2]	Stainless steel V2A	
Enclosure colour[2]	Natural, brushed	
Dimensions[2] (H x W x D)	113 x 135 x 45 mm /(5.35 x 4.5 x 1.8 in.)	
Weight[2]	Approx. 0,5 kg (1.1 lbs.)	
Protection class[2]	IP 55	
Mounting[2]	Wall mounting, pillar mounting	
Cable entry	Standard 1 x M 20	
Wire connection	Screw-type terminal min. 0.25 to. 2.5 mm^2 24 to 14 AWG	
Wire distance (analog mode)	Current signal ca. 500 m (1500 ft.) Voltage signal ca. 200 m (600 ft.)	

[1] The table doesn't claim to be complete. Other gases, too, can have an influence on the sensitivity. The mentioned cross sensitivity data are only reference values valid for new sensors.

[2] Indications only for option "stainless steel", for further types see datasheet "AT-DT Enclosure".

Guidelines	EMC Directive 2004 / 108 / EWG
	CE

Options	
Relay output	
Alarm relay 1 (switching threshold 5 ppm)	30 VAC/DC 0,5 A, potential-free, SPDT
Alarm relay 2 (switching threshold 8 ppm)	30 VAC/DC 0,5 A, potential-free SPNO/SPNC
Power consumption	30 mA, (max. 0,8 VA)
Warning buzzer	
Acoustic pressure	85 dB (distance 300 mm) (1 ft.)
Frequency	3,5 kHz
Power consumption	30 mA, (max. 0,8 VA)
Heating	
Temperature controlled	0 °C ±3°C (32 °F ± 5 °F)
Ambient temperature	- 40 °C
Power supply	18 - 28 VDC/AC
Power consumption	0.2 A ; 5 VA
Analog input	
Only for RS-485 mode	4 – 20 mA overload and short-circuit proof, input resistance 200 Ω
Power supply for external transmitter	24 VDC max. 50 mA

10 Figures

Application: Analog mode
Fig. 1

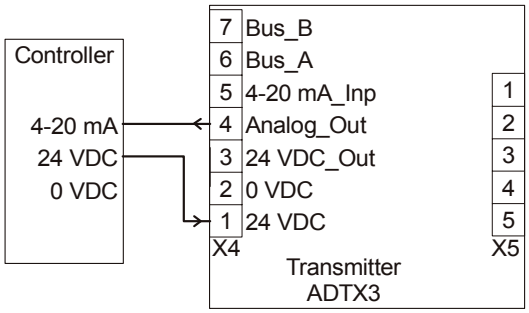

Two-wire connection
- 4 - 20 mA output signal without options

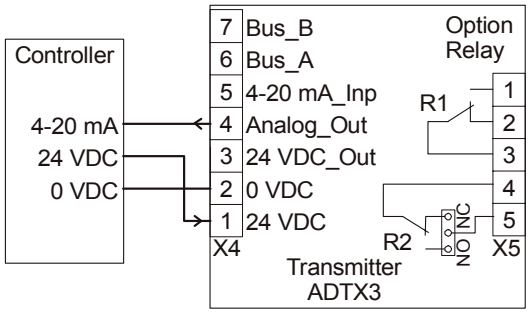

Three-wire connection
- VDC output signal
- 0 – 20 mA output signal
- Relay output
- Heating

PCB AT-1195 V3
Fig. 3

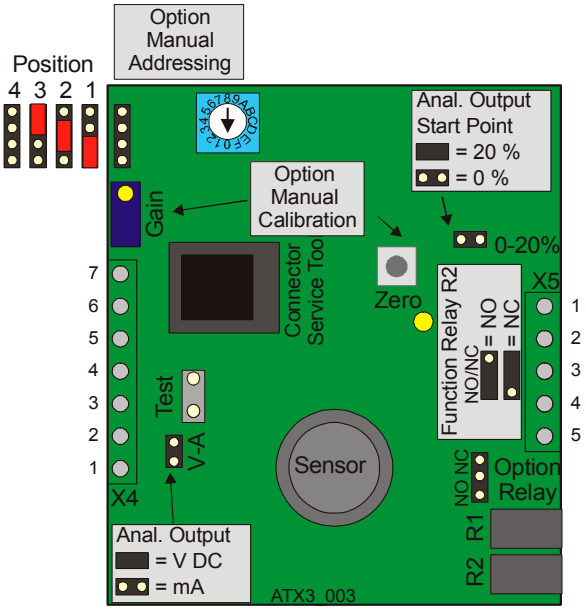

Terminal block

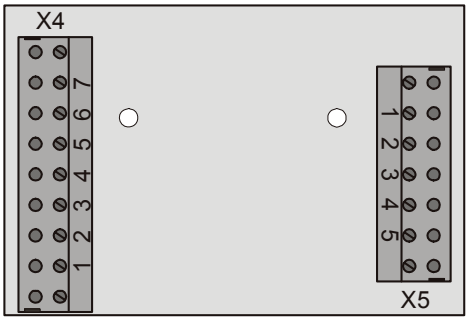

Selection analog output signal
Fig. 4

Jumper 0- 20 %	Jumper V-A	Output signal
Not set	Not set	0 – 20 mA
Set	Not set	4 – 20 mA
Not set	Set	0 – 10 V
Set	Set	2 – 10 V

Calibration adapter
Fig. 5
Type: CONKIT-E/CH-LC

11 Notes and General Information

It is important to read this user manual thoroughly and clearly in order to understand the information and instructions. The PolyGard® transmitters must be used within product specification capabilities. The appropriate operating and maintenance instructions and recommendations must be followed.

Due to on-going product development, MSR and IN*TEC* Controls reserves the right to change specifications without notice. The information contained herein is based upon data considered to be accurate. However, no guarantee is expressed or implied regarding the accuracy of this data.

11.1 Intended Product Application

The PolyGard® O_2 transmitters are designed and manufactured for control applications and air quality compliance in commercial buildings and manufacturing plants.

11.2 Installers' Responsibilities

It is the installer's responsibility to ensure that all PolyGard® transmitters are installed in compliance with all national and local codes and OSHA requirements. Installation should be implemented only by technicians familiar with proper installation techniques and with codes, standards and proper safety procedures for control installations and the latest edition of the National Electrical Code (ANSI/NFPA70). It is also essential to follow strictly all instructions as provided in the user manual.

11.3 Maintenance

It is recommended to check the PolyGard® transmitter regularly. Due to regular maintenance any performance deviations may easily be corrected. Re-calibration and part replacement in the field may be implemented by a qualified technician and with the appropriate tools. Alternatively, the easily removable plug-in transmitter card with the sensor may be returned for service to IN*TEC* Controls.

11.4 Limited Warranty

MSR-Electronic-GmbH and IN*TEC* Controls warrants the PolyGard® transmitter for a period of two years, 12 months normal exposure for the sensor, from the date of shipment against defects in material or workmanship. Should any evidence of defects in material or workmanship occur during the warranty period, IN*TEC* Controls will repair or replace the product at their own discretion, without charge.

This warranty does not apply to units that have been altered, had attempted repair, or been subject to abuse, accidental or otherwise. The warranty also does not apply to units in which the sensor element has been overexposed or gas poisoned. The above warranty is in lieu of all other express warranties, obligations or liabilities.

This warranty applies only to the PolyGard® transmitter. MSR-Electronic-GmbH and/or IN*TEC* Controls shall not be liable for any incidental or consequential damages arising out of or related to the use of the PolyGard® transmitter.

If the PolyGard® transmitter needs to be returned to IN*TEC* Controls for service, an RMA number must be obtained prior to sending.